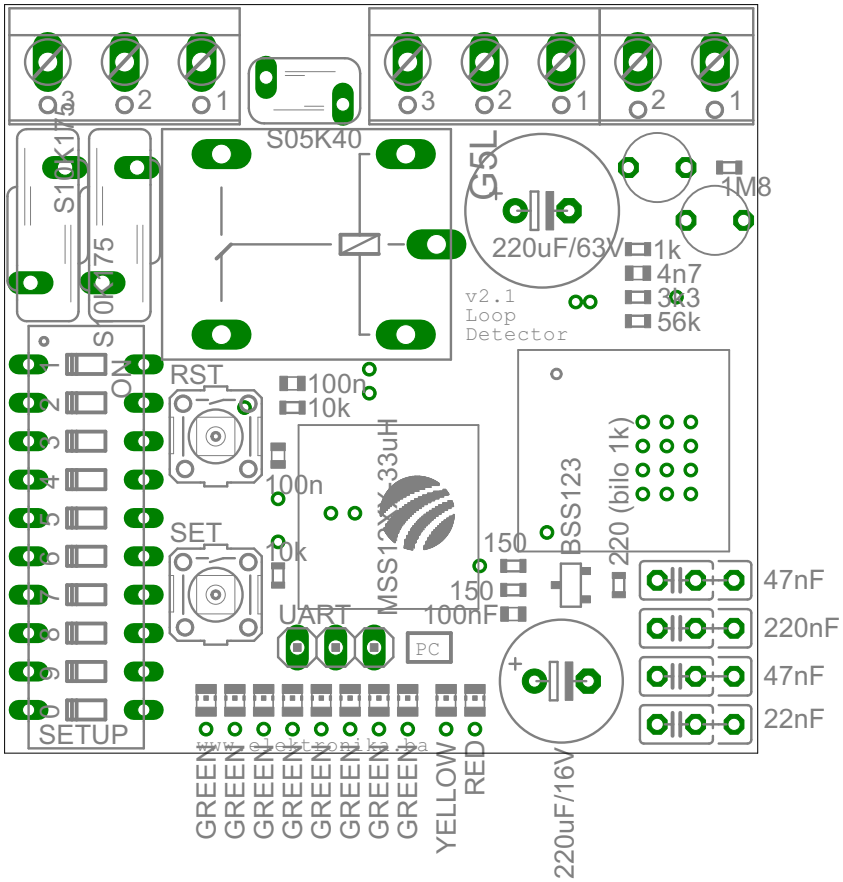
S10K175
S10K175
S05K40
G5L
220uF/63V
1M8
1k
4n7
3k3
56k
v2.1
Loop
Detector
RST
SET
100n
10k
100n
10k
MSS12V-33uH
BSS123
220 (bilo 1k)
150
150
100nF
UART
PC
47nF
220nF
47nF
22nF
220uF/16V
SETUP
ON
GREEN
GREEN
GREEN
GREEN
GREEN
GREEN
GREEN
GREEN
YELLOW
RED
www.elektronika.sk