Flashing Alarm LED

D. Kluts

Unfortunately, these days it is no longer an inordinate luxury to protect your car against break-in and theft. Many car insurance companies even make installation of a certain class of car alarm a condition for providing insurance. However, having an effective alarm system installed is not economically justified for the owner of an old and/or inexpensive car, since such systems are not exactly cheap. Naturally, in case of theft the financial loss experienced by the owner of such a car is relatively small, but this does not make the emotional sense of loss any less.

This circuit has been specially designed to create a certain degree of protection for low-budget cars without alarm installations. It is a simple bit of electronics that causes an LED to start flashing as soon as the ignition is switched off. Of course, we all know that such a dummy alarm will not stop a determined thief, but an impulse thief will probably have second thoughts on seeing a flashing LED.

As far as the electronics are concerned, the circuit is quite simple. The input to the circuit is connected to a point on the ignition switch that is live only when the ignition is switched on. A voltage of 11.4 V (12 V – 0.6 V) will then appear across R1, with only 0.6 V appearing across the base–emitter junction of T1 and diode D2. Transistor T1 will thus be cut off, so the rest of the circuit will not receive any power.

This will change when the ignition is switched off, since a base current will then flow through T1 via D2 and R1, causing T1 to conduct and provide power to the rest of the circuit. This consists of a multivibrator built around T2 and T3, which causes LED D3 to be periodically illuminated. Any desired colour of LED can be used for D3, but the circuit appears quite a bit more modern and effective with a blue LED than with an 'ordinary' red LED.

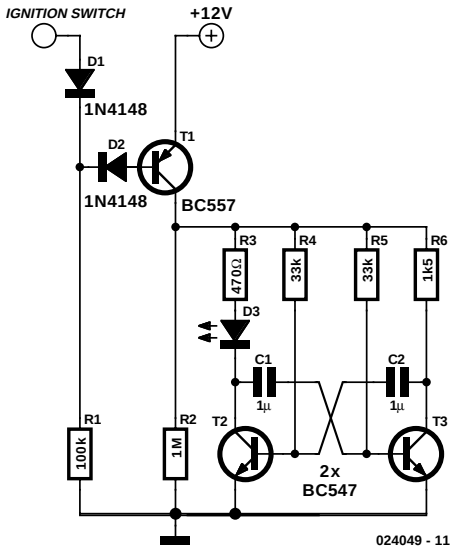

(024049-1)